ASSEMBLY - OUTERFRAME

Typical 2 pane OX outerframe shown. See following pages for detailed instructions on completing each joint.

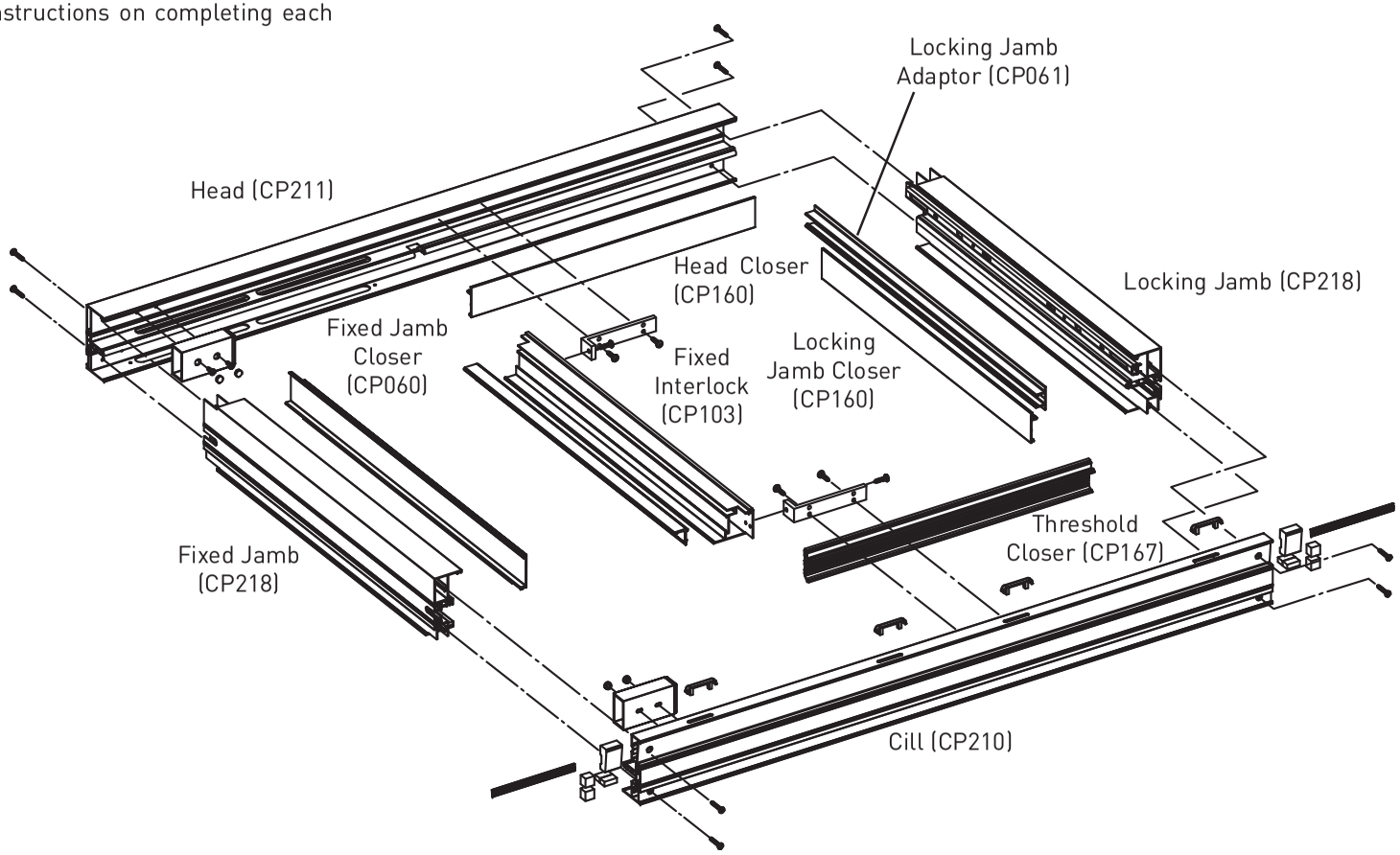

© Copyright Hydro Building Systems UK Limited. This data sheet is issued subject to the condition that it shall not be reproduced without the consent of Hydro Building Systems Limited in writing

ASSEMBLY - OUTERFRAME

Track Assembly

Slide stainless steel track into groove in cill. Fit track end fillers (C3101) to the gap at either end of the cill as shown below. On 3 pane units, at the non-sliding end, slide track filler CPC111 into track recess. Completely seal end of groove after fitting fillers.

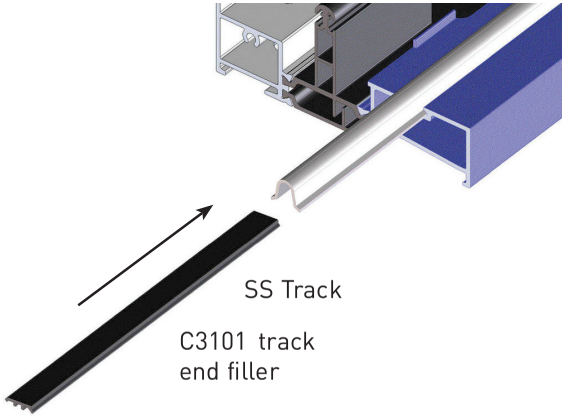

Fitting Cill Plug at Interlock Drainage Point

At every interlock drainage point, fit plug CPC108 as shown below - seal into position using Henkel Terostat 934 (clear) or 939 (grey, black or white).

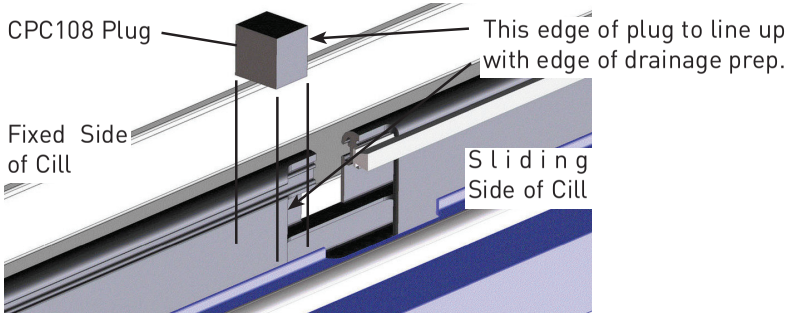

Jamb to Cill Assembly

Slide pile DFC1450 into appropriate grooves in jamb and cill (see general arrangements). Coat entire cut ends of both jambs with Henkel Terostat 934 (clear) or 939 (grey, black or white). Seal plugs DFC1402, CPC108 & CPC126 into recesses in cill as shown below. Apply a generous amount of sealant to cill rebate / jamb inner face joint.

Assemble using 2 off No. 8 x 1" pan pozi self tappers per joint. Check for any weak spots in sealing and rectify. Clean off excess sealant immediately using Teroson FL cleaner.

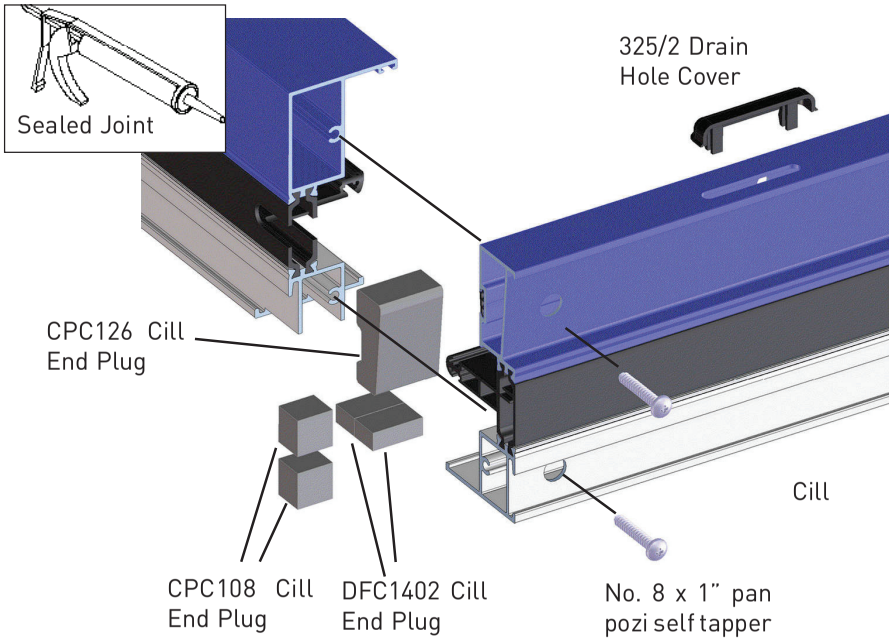

© Copyright Hydro Building Systems UK Limited. This data sheet is issued subject to the condition that it shall not be reproduced without the consent of Hydro Building Systems Limited in writing

ASSEMBLY - OUTERFRAME

Jamb to Head Assembly

Slide pile DFC1450 into appropriate grooves in jamb and head (see general arrangements). Coat entire cut ends of both jambs with Henkel Terostat 934 (clear) or 939 (grey, black or white). Assemble using 2 off No. 8 x 1" pan pozi self tappers per joint. Check for any weak spots in sealing and rectify. Clean off excess sealant immediately using Teroson FL cleaner.

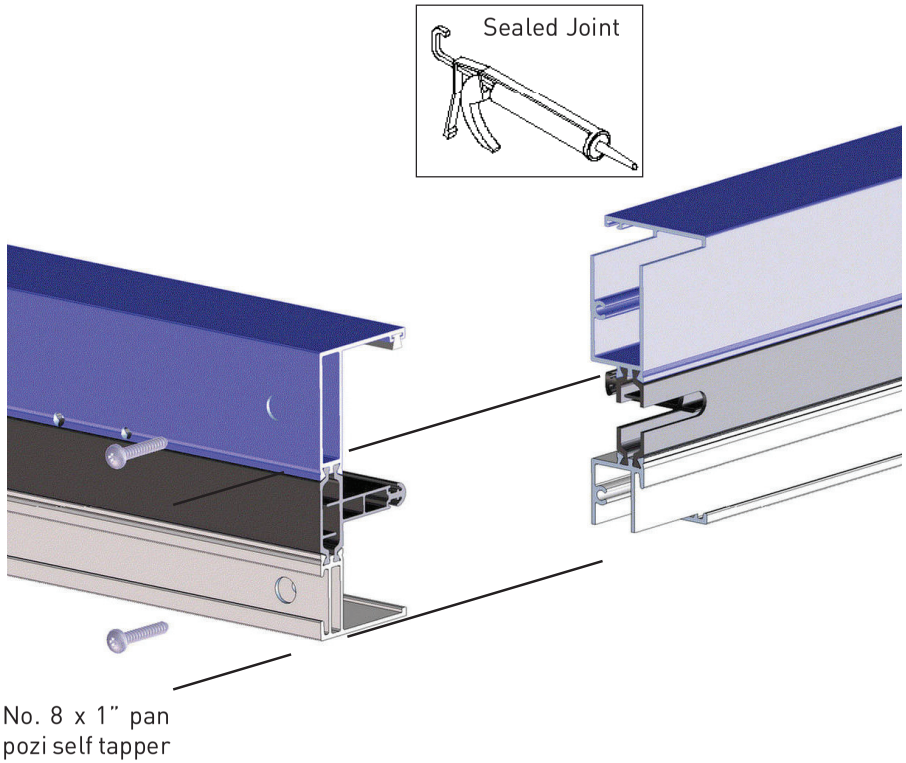

Keep and Jamb Adaptor Fixing

Drill 3.5 dia holes through existing holes in jamb adaptor into jamb. Fix keep (CDC101) using only two No. 8 x 1 1/2" csk self tapper through the two central slotted holes, though the jamb adaptor into the jamb. Final fixing is carried out after installation / adjustment through the remaining holes using the same screws. CP069 trim must be fitted above and below keep AFTER installation and adjustment.

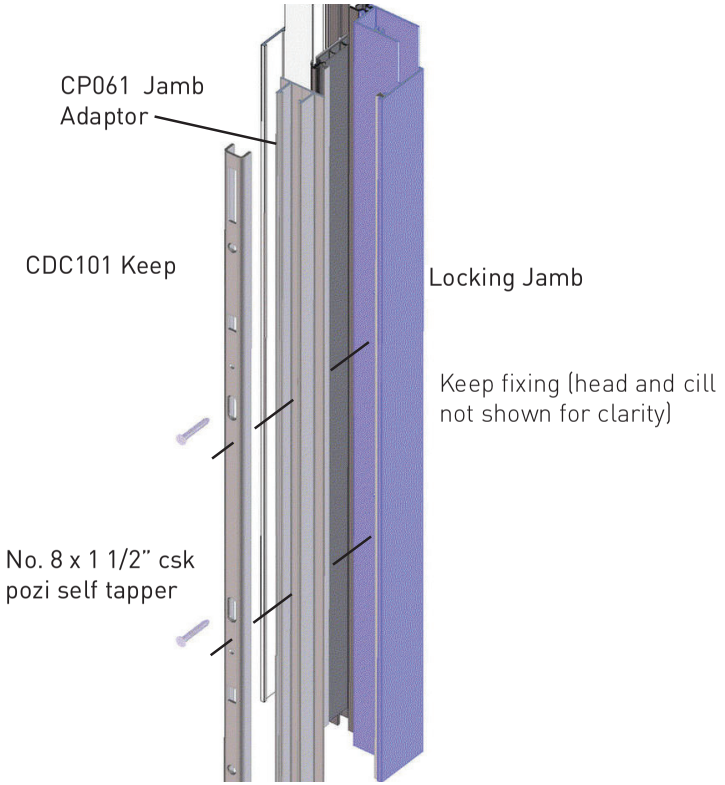

© Copyright Hydro Building Systems UK Limited. This data sheet is issued subject to the condition that it shall not be reproduced without the consent of Hydro Building Systems Limited in writing

ASSEMBLY - OUTERFRAME

Fitting of 3 Pane Mullions

Slide pile DFC1450 into groove in 3 pane mullion. Coat entire cut ends of mullion with Henkel Terostat 934 (clear) or 939 (grey, black or white). Fit plug CPC108 as shown under mullion at cill - seal into position using Henkel Terostat 934 (clear) or 939 (grey, black or white). Assemble using 2 off No. 8 x 1" pan pozi self tappers per joint. Check for any weak spots in sealing and rectify. Clean off excess sealant immediately using Teroson FL cleaner. Fitting of keep is similar to the 2 pane as shown on previous page but without the adaptor profile.

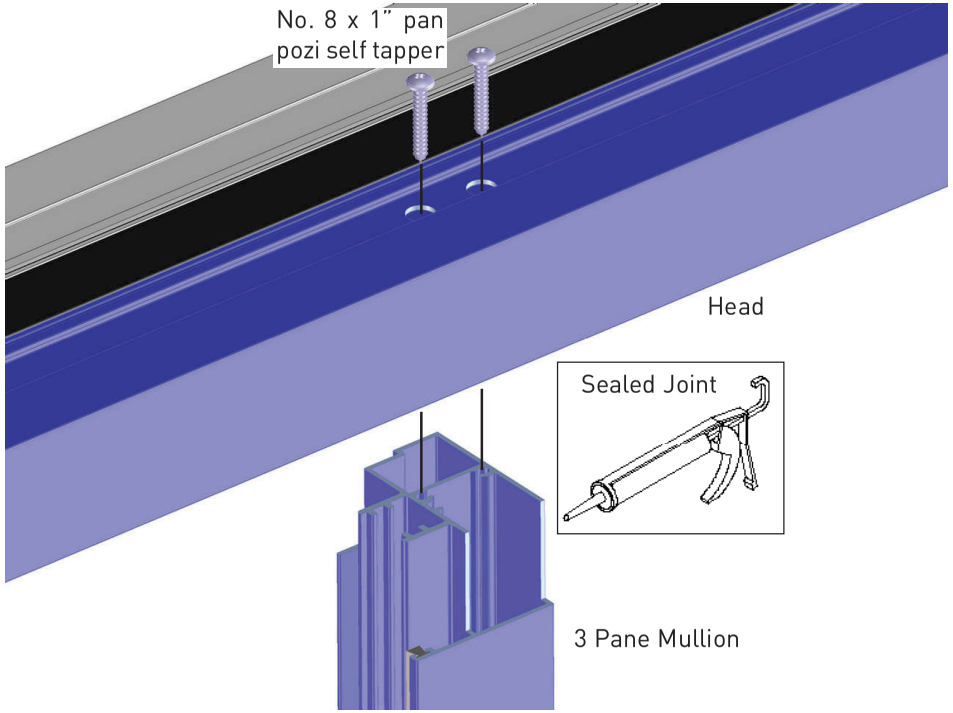

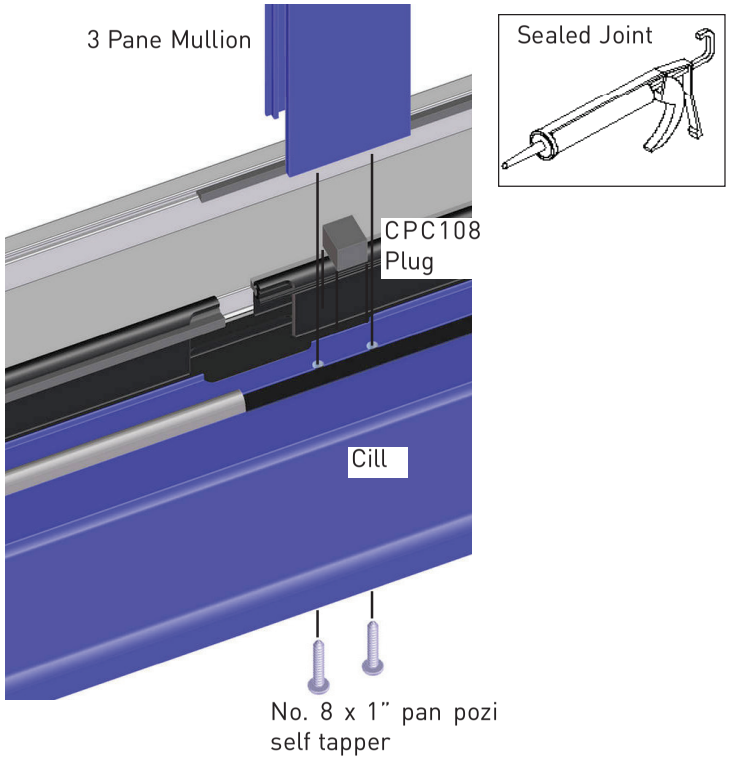

It is ESSENTIAL that the 9.5 dia clearance holes on the under side of the cill for fitting the 3 pane mullion have CPC109 hole plugs SEALED into them, including any un-used holes on non-handed cut down kits.

© Copyright Hydro Building Systems UK Limited. This data sheet is issued subject to the condition that it shall not be reproduced without the consent of Hydro Building Systems Limited in writing

ASSEMBLY - TRICKLE VENT

Trickle Vent Assembly

Fit CWP109 operator to vent body using screws supplied. Slide C182 mesh into groove in vent. Fit DFP664 end caps using sealant to retain in place. Apply sealant to both inner and outer engagement legs of the vent body. Fix vent body to head of door using No.10 x 1 3/4" pan self tapping screws. Clean off excess sealant.

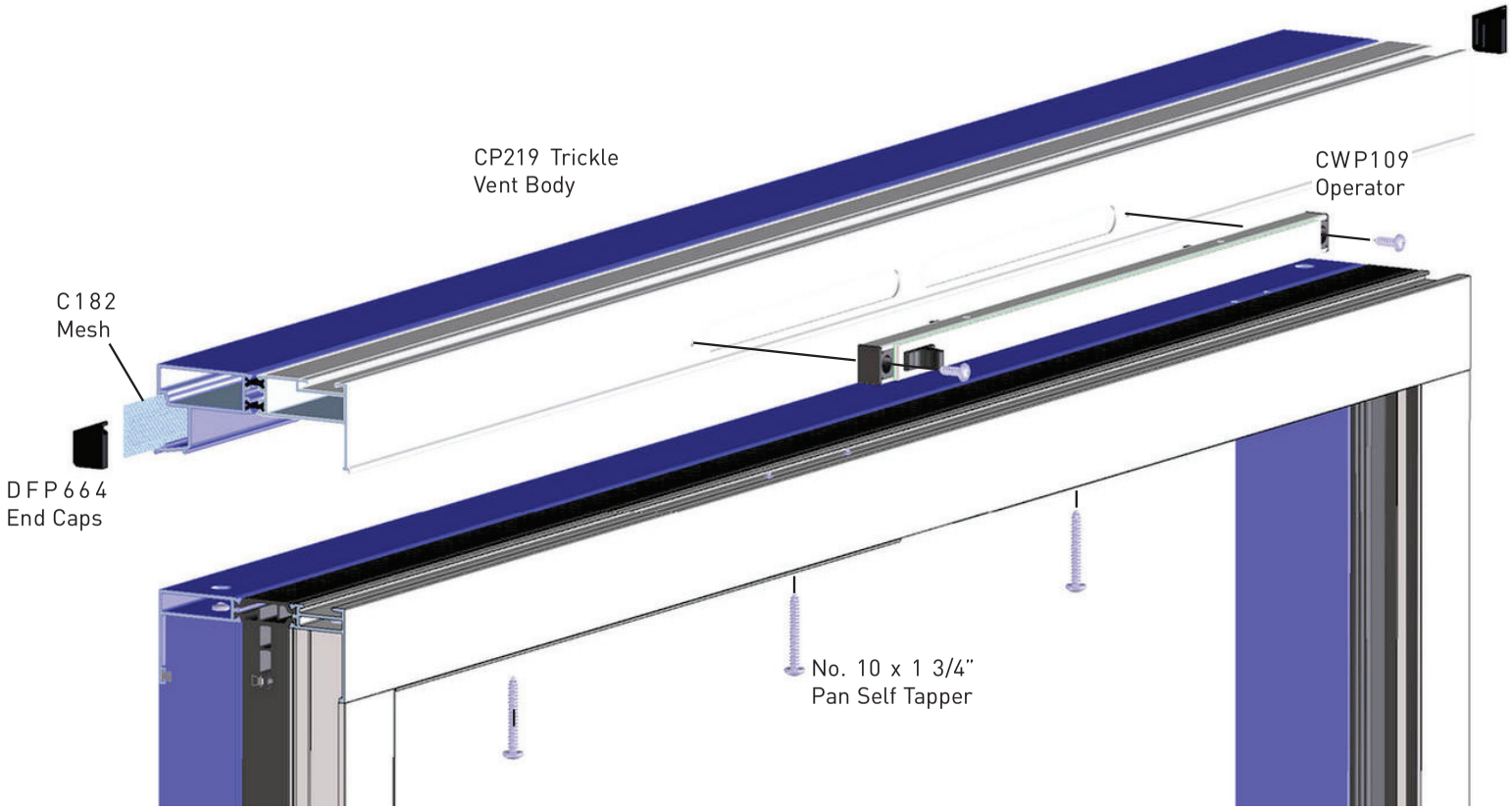

© Copyright Hydro Building Systems UK Limited. This data sheet is issued subject to the condition that it shall not be reproduced without the consent of Hydro Building Systems Limited in writing

ASSEMBLY - SLIDING PANE

Typical sliding pane shown. See following pages for detailed instructions on completing each joint. Fit retained gasket CPC215 to grooves in all stiles and rails as shown below before assembling leaf.

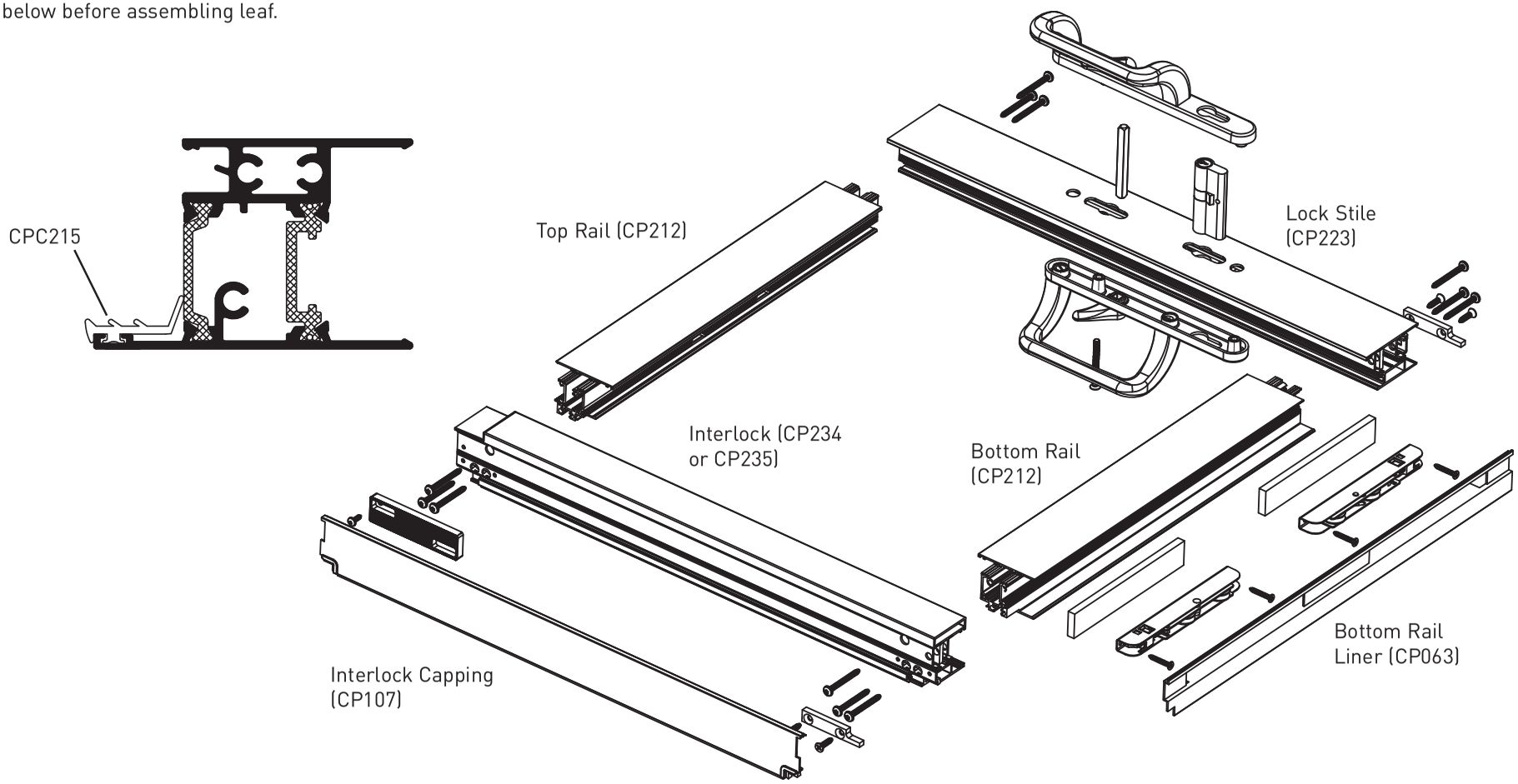

© Copyright Hydro Building Systems UK Limited. This data sheet is issued subject to the condition that it shall not be reproduced without the consent of Hydro Building Systems Limited in writing

ASSEMBLY - SLIDING PANE

Fitting Rollers (CPC103)

Pre-Adjust rollers to height shown below to minimise on-site adjustment. Use 2 off No.8 x 1" pan screws and 1 off CPC106 Roller fixing tapping plate per roller. Drill 2.0 dia holes through pre-prepared holes in rail into tapping plate. Ensure that all screws penetrate the tapping plate.

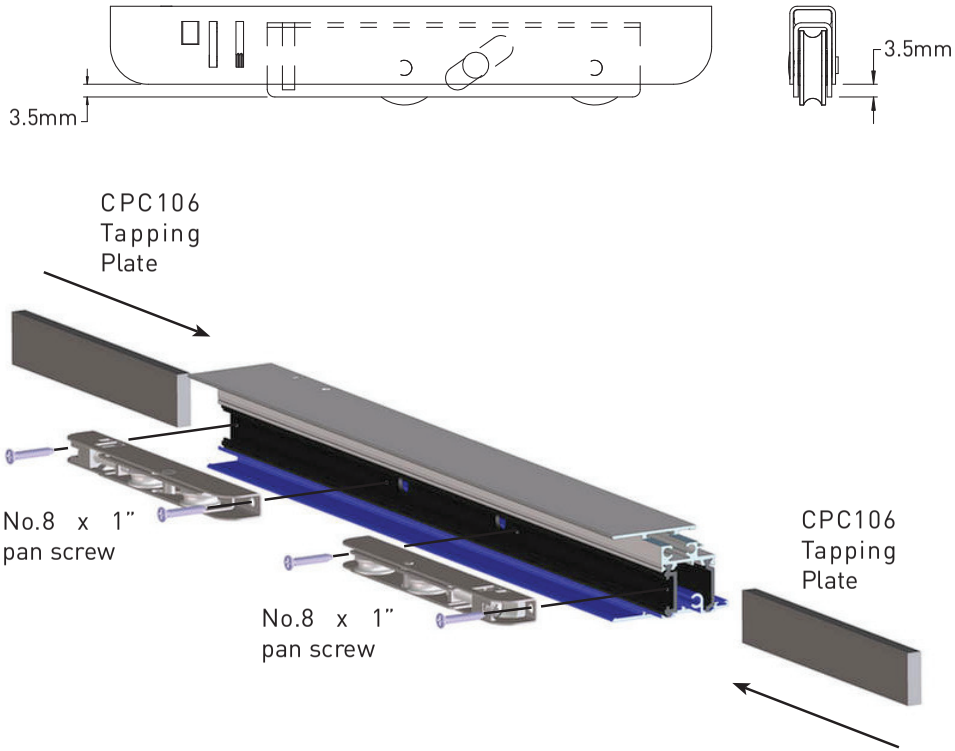

Lock Stile to Rail

Coat entire cut ends of all rails with Henkel Terostat 934 (clear) or 939 (grey, black or white). Note orientation of clamp plate. Assemble using 3 off No. 10 x 1 3/4" pan pozi self tappers. Clean off excess sealant immediately using Teroson FL cleaner.

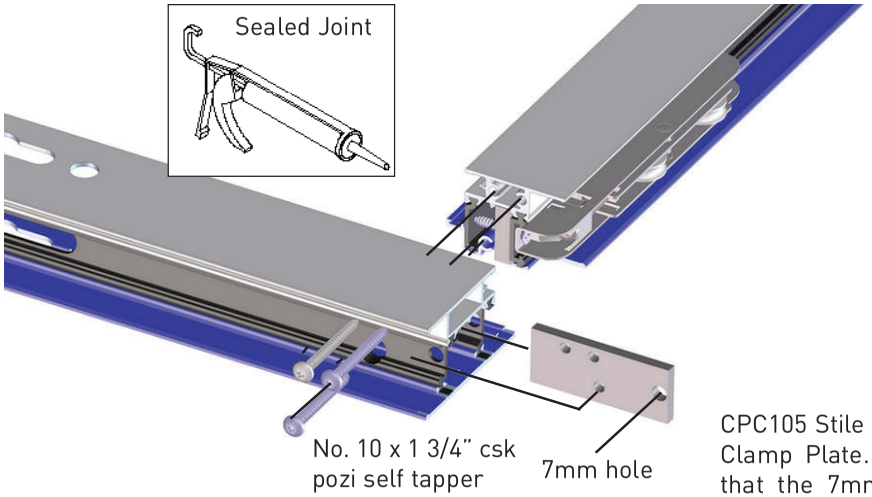

CPC105 Stile to Rail Clamp Plate. **NOTE** that the 7mm hole must be towards the end of the stile (as shown) on bottom rails.

© Copyright Hydro Building Systems UK Limited. This data sheet is issued subject to the condition that it shall not be reproduced without the consent of Hydro Building Systems Limited in writing

ASSEMBLY - SLIDING PANE

Interlock to Rail

Note use of Torx head screws on all outer interlock to rail fixings. Coat entire cut ends of all rails with Henkel Terostat 934 (clear) or 939 (grey, black or white). Note orientation of clamp plate. Assemble using 3 off No. 10 x 1 3/4" pan torx self tappers. Clean off excess sealant immediately using Teroson FL cleaner. **NOTE** on 3 pane XOX centre panes, the pane must be assembled around the glass after first fitting retained gasket (see glazing section of the manual for further details)

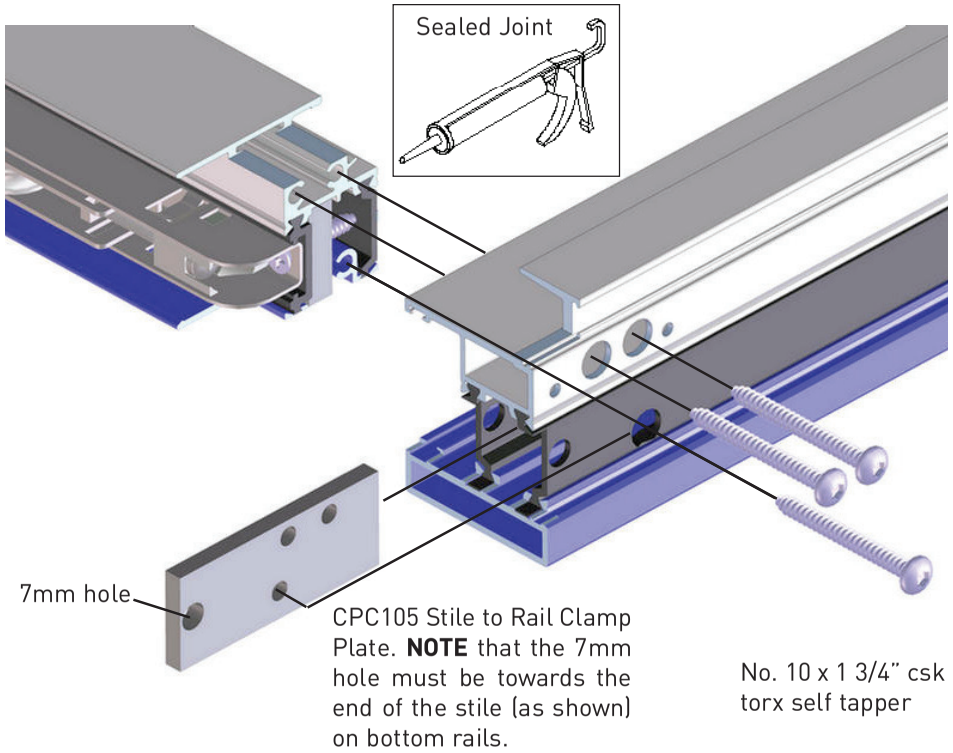

Fitting Interlock Capping

Slide DFC1450 pile into groove in interlock capping. Slide DF1117 interlock insulator into groove in interlock in the orientation shown. Fit off-cuts of woolpile from kit components to both grooves DFC1400 & 1401 interlock end mouldings as shown - hold woolpiles in place using cynoacrylate adhesive. Push end mouldings onto both ends of DF1107 interlock capping. Drill 3.5dia hole through DFC1425 packer into polyamide strip at top of interlock whilst holding the packer flush with the top of the interlock and 12.5mm from outer face as shown. Fix packer using No.8 x 1/2" pan screw.

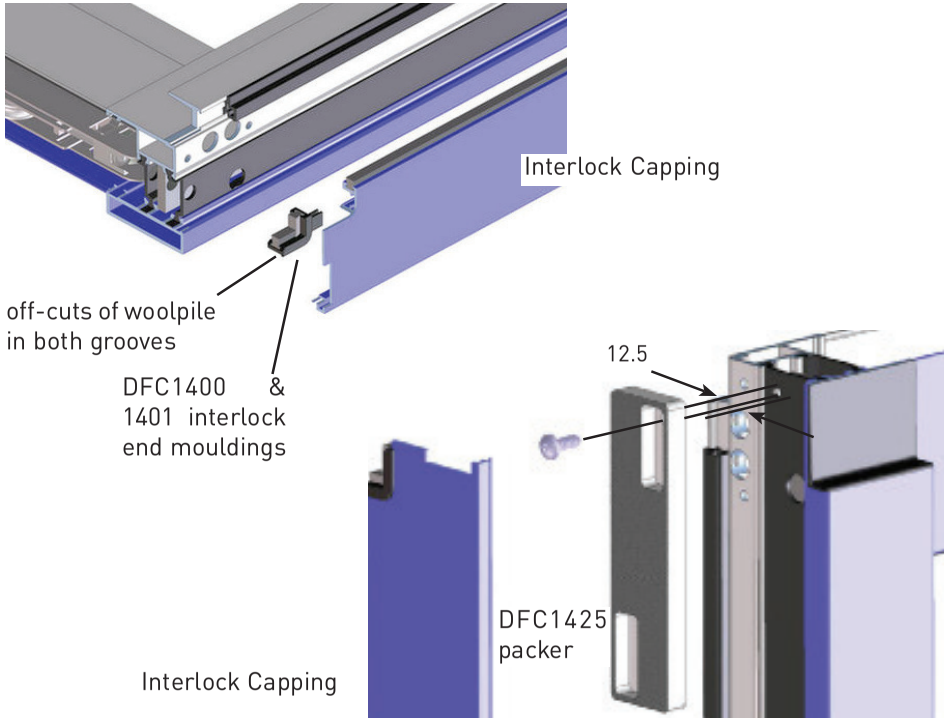

© Copyright Hydro Building Systems UK Limited. This data sheet is issued subject to the condition that it shall not be reproduced without the consent of Hydro Building Systems Limited in writing

ASSEMBLY - SLIDING PANE

Fitting Bottom Rail Liner

Clip CPC063 bottom rail liner into bottom rail as shown below. Ensure that end is flush with the outside face of the interlock capping. If necessary, use sealant to ensure a good fit is maintained especially near the ends.

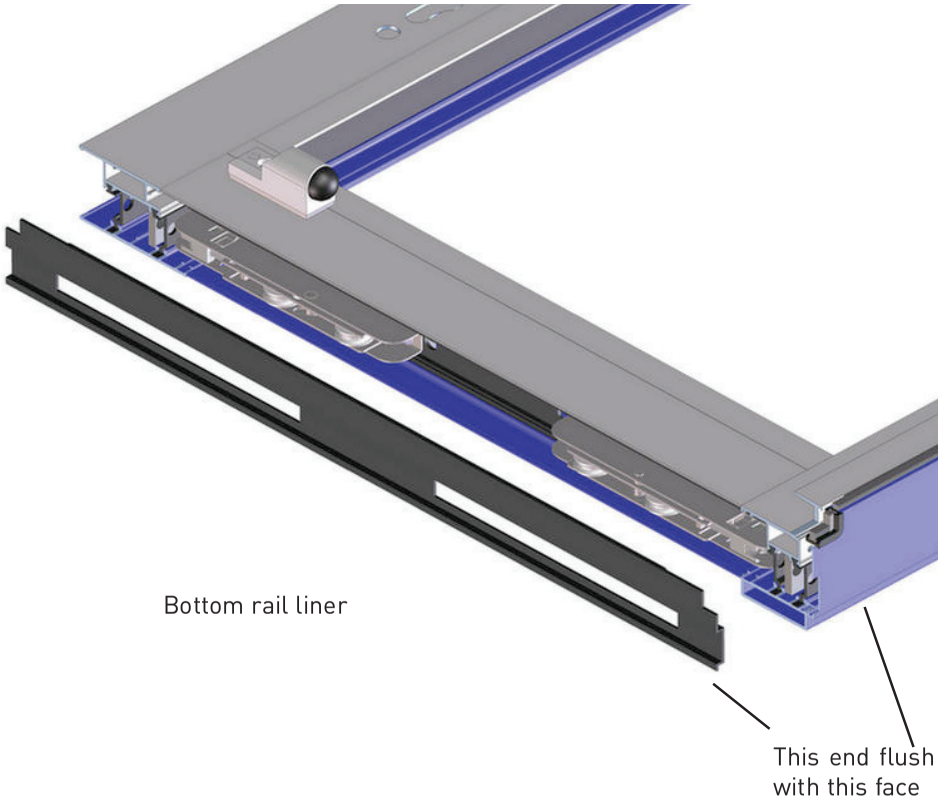

Fitting Lock and Handle

Offer lock into stile (do not fix yet). Fit Cylinder using screw supplied. Fix handles and spindle using screws supplied. Now fix lock using DFC1699 4.3 x 25 csk pozi PA self drill screws. Fitting of 4-pane dummy handles is similar (but without lock, spindle or cylinder). (Illustration of lock has been shortened for clarity - actual lock has 6 hooks). Cut and fit CP070 trim above and below lock faceplate.

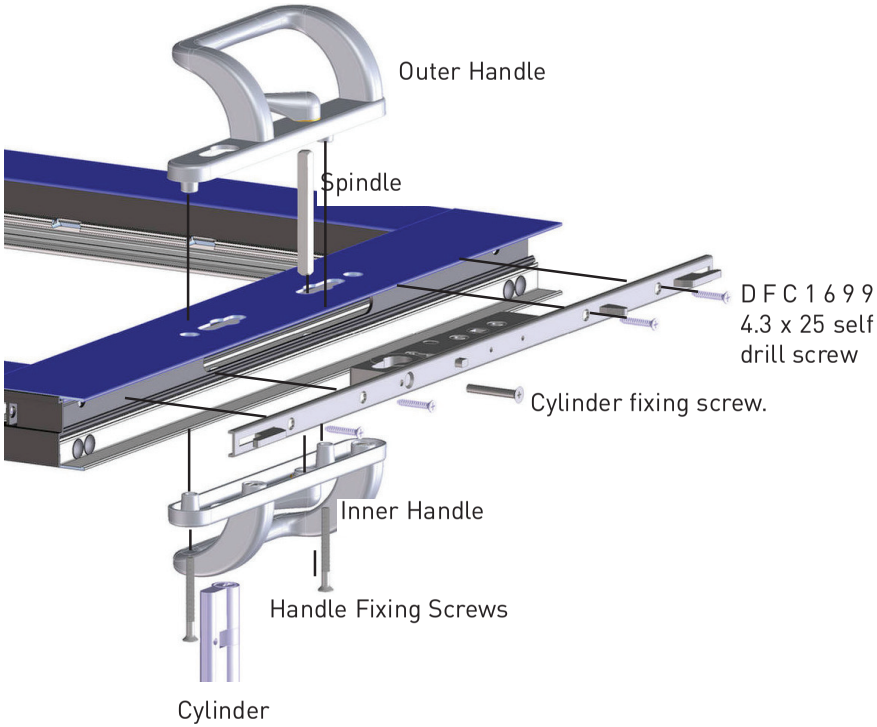

© Copyright Hydro Building Systems UK Limited. This data sheet is issued subject to the condition that it shall not be reproduced without the consent of Hydro Building Systems Limited in writing

ASSEMBLY - SLIDING PANE

Fitting 4 Pane Slave Stile Adaptor and Keep

Fit DFC1200 flipper seal to CP064 Adaptor. Slide adaptor into slave stile ensuring seal is towards the inside. Ensure adaptor is flush with ends of stile. Drill 2.0 dia holes through existing counterbored holes in adaptor into stile. Fix adaptor using No. 8 x 1" pan self tappers.

Fix keep (CPC101) using only two No. 8 x 1 1/2" csk self tapper through the two central slotted holes, though the into the slave stile. Final fixing is carried out after installation / adjustment through the remaining holes using the same screws. CP069 trim must be fitted above and below keep AFTER installation and adjustment.

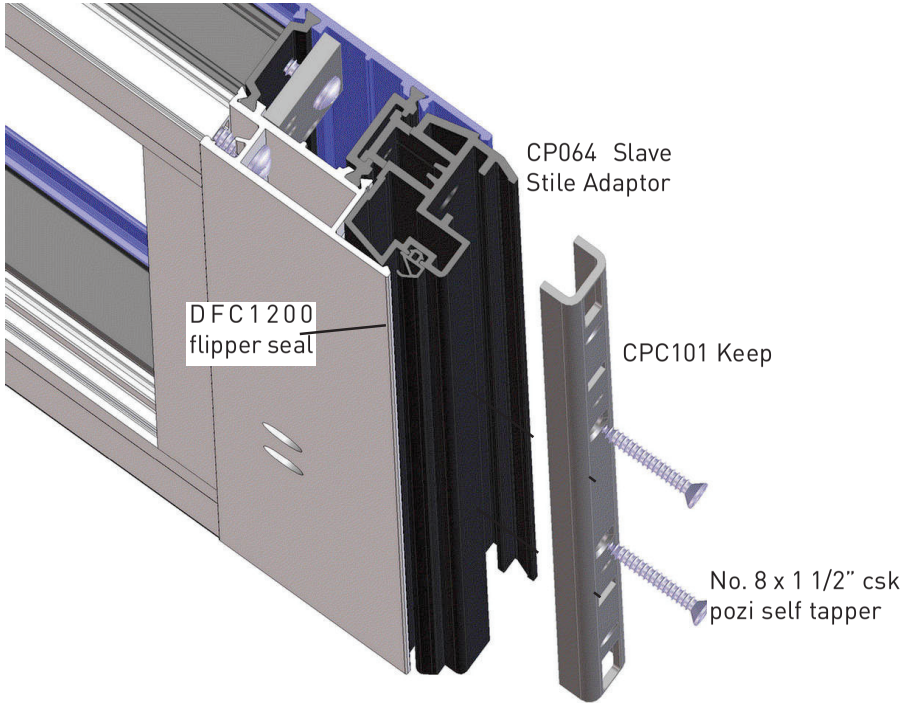

Fitting 4 Pane Over-run Buffer

Fit CPC124 over-run buffers to recess behind interlock hook near the top and bottom of both sliding interlocks as shown below.

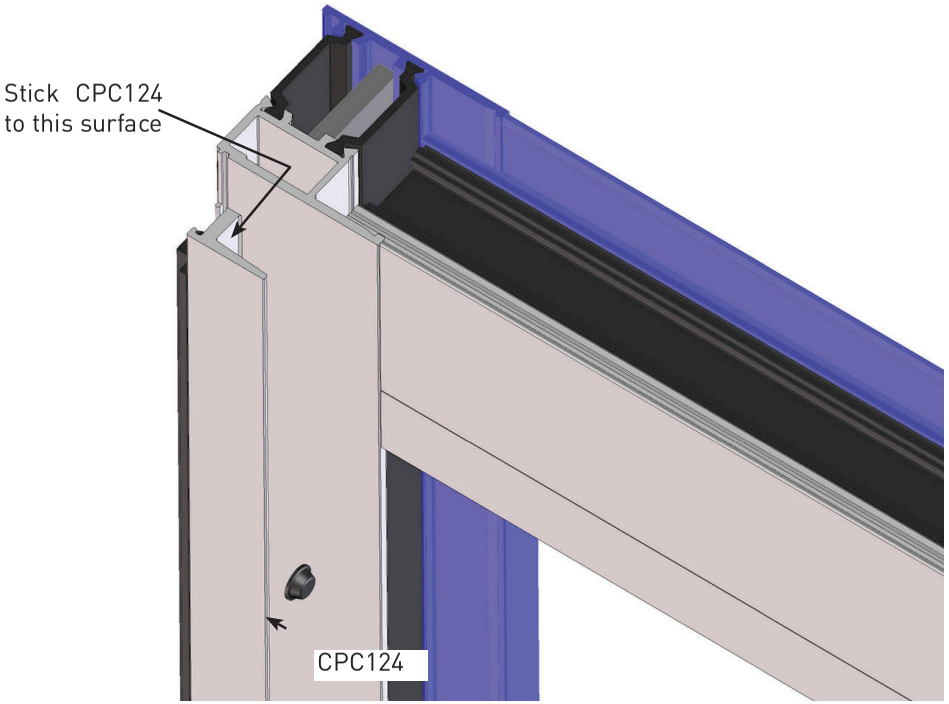

© Copyright Hydro Building Systems UK Limited. This data sheet is issued subject to the condition that it shall not be reproduced without the consent of Hydro Building Systems Limited in writing

ASSEMBLY - SLIDING PANE

Glazing - Sliding Panes

Fit DFC1415 (6mm) glazing packers using a little silicone to hold them in place. Take care not to cover any drainage slots. Fit one near each bottom corner of each pane and one near the top of the stile/interlock.

Offer glass into pane by first carefully shuffling it into the glazing channel of the interlock. Centralise the glass then fit the beads as shown below. All joints in beads must be sealed using Henkel Terostat. Note, beads are supplied over length for cutting down.

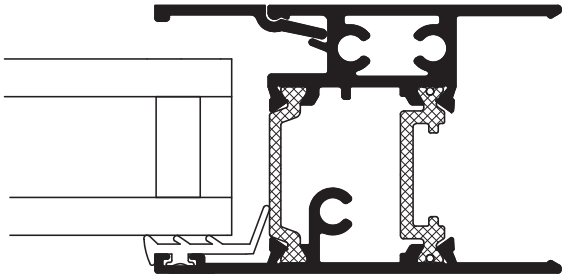

Fit inner wedge gasket (DFC1203) by either mitre cutting or notching at the corners.

© Copyright Hydro Building Systems UK Limited. This data sheet is issued subject to the condition that it shall not be reproduced without the consent of Hydro Building Systems Limited in writing

INSTALLATION

Fitting Frame Into Aperture

It is vitally important that the cill is laid flat and level to achieve good performance. Jambs must be vertical in both planes, and no twist or other distortion allowed in the frame.

Prior to installing the frame, the opening should be checked to ensure that it is free of debris, and that any projecting brickwork has been trimmed back.

Any damaged damp proof membranes should be replaced or additional membranes incorporated.

When the opening was originally measured a suitable gap should have been allowed around the window, this will allow the window to be packed to ensure that it is plumb and square within the opening.

Ideally the frame should be bedded on mortar.

The frame can then be positioned in the opening and held square by packing at the very corners of the frame, taking care not to damage or deform the frame profiles.

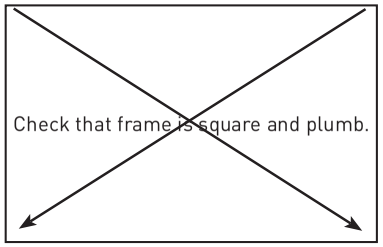

To check for squareness, measure the diagonals from corner to corner, these diagonal dimensions should not differ by more than 1 or 2mm, if they do then adjust the packing until the frame is square within the opening.

The lay of the frame in to out can be checked by using a spirit level on the jambs. On replacement applications, the correct position of the frame might not align with the original. This will require some remedial work to make good the plaster reveal around the frame on the inside as well as any render that is present on the outside.

Glazing Fixed Pane

Fit DFC1510 retained gasket into groove in polyamide upstand at head, cill and fixed jamb (see general arrangements). Fit CPC127 (5mm) glazing packers into inner recess of cill near to corners of fixed pane as shown below. Lift fixed glazing into place and slide into fixed jamb. Lift fixed interlock into place and fix at head and cill using angle brackets as shown over page. Seal ends of fixed interlock at top and bottom. Fit DFC1509 wedge gasket on the inside notching or mitre joining the corners Take care not to stretch gasket whilst fitting. Seal joints in gasket using Terostat sealant.

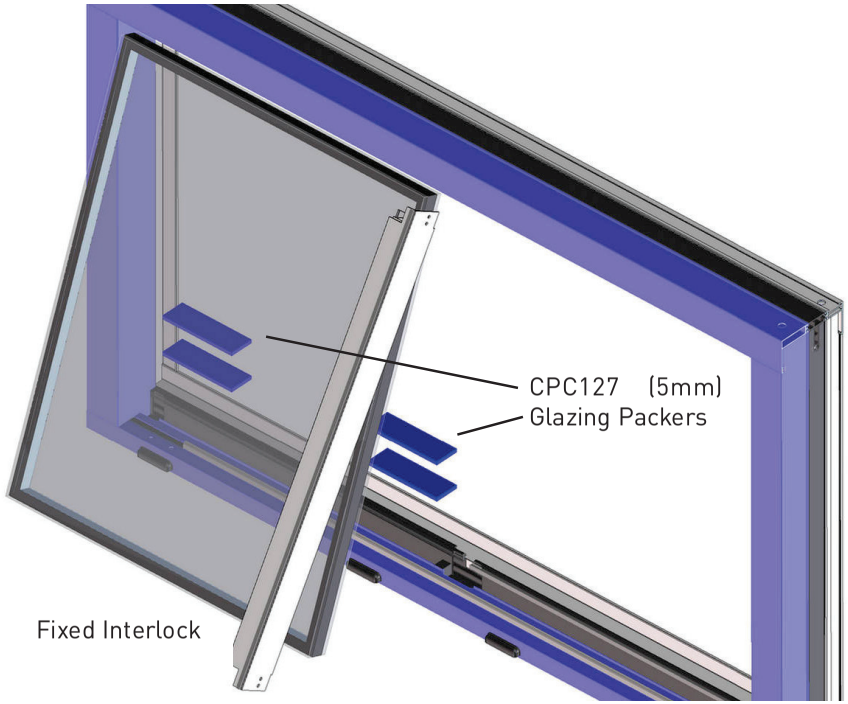

© Copyright Hydro Building Systems UK Limited. This data sheet is issued subject to the condition that it shall not be reproduced without the consent of Hydro Building Systems Limited in writing

INSTALLATION

Fixing of Fixed Interlock

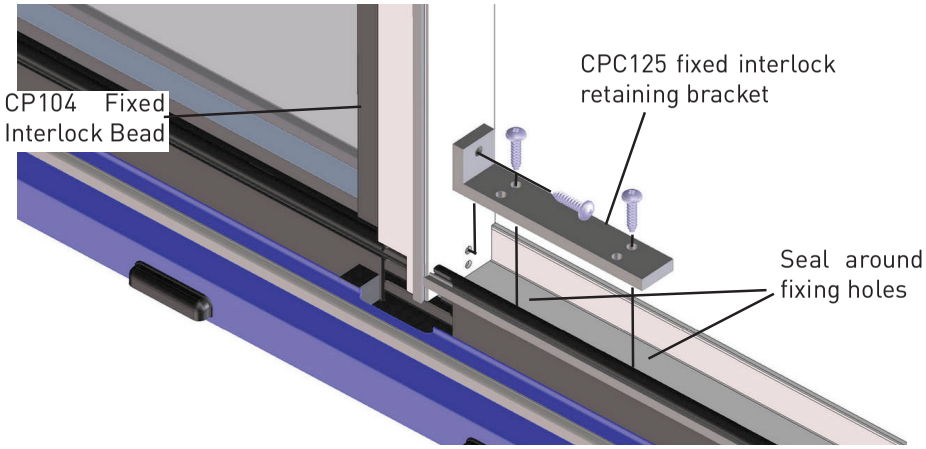

Completely seal around fixing holes in cill. Use CPC125 bracket and 3off No. 10 x 3/4" pan screws to fix the fixed interlock at the cill (as shown above) and similarly at the head. Fit fixed interlock bead (CP103). Seal gap between fixed interlock and polyamide upstand at the cill as shown below.

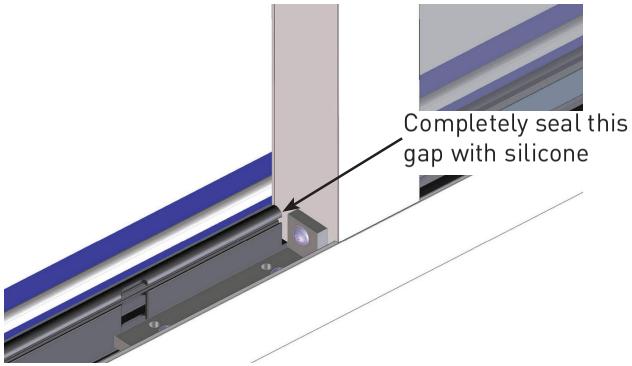

3 Pane OXO Fixed Interlock

At the TOP ONLY of the fixed interlock which occurs at the 3 pane mullion side, an additional notch is required as shown below.

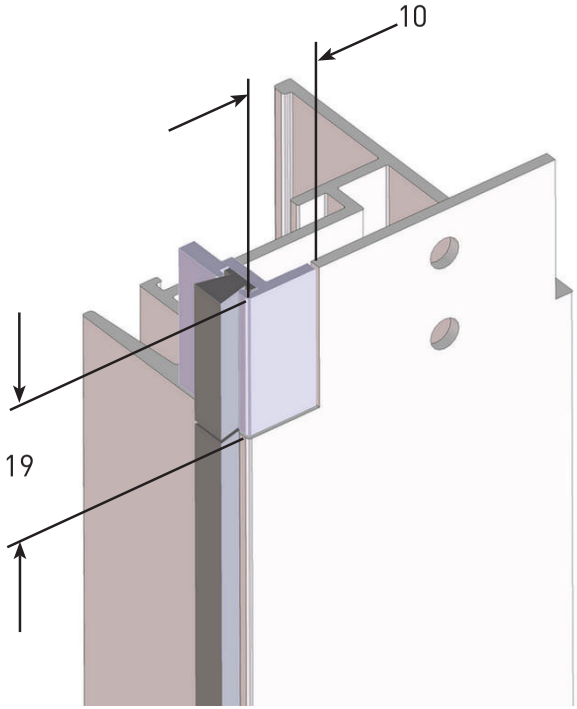

© Copyright Hydro Building Systems UK Limited. This data sheet is issued subject to the condition that it shall not be reproduced without the consent of Hydro Building Systems Limited in writing

INSTALLATION

3 Pane OXO Fixed Glazing at Locking Side

Fit DFC1510 retained gasket to 3 pane mullion as shown below. Fit CPC127 glazing packers to cill as shown on previous page. Lift in dgu from inside and slide into jamb recess. Fit a total of 2 x 2 CPC124 buffers spaced at approx 200mm either side of the centre of the mullion as shown below. Apply silicone sealant for approx 400mm at the centre into the recess on the fixed interlock as shown below. Fit 702/91 into sealant beads at either end of bead as shown below. Ensure that there is enough sealant to make contact with the leg of the 3 pane mullion. Fit fixed interlock as previously shown for 2 pane doors.

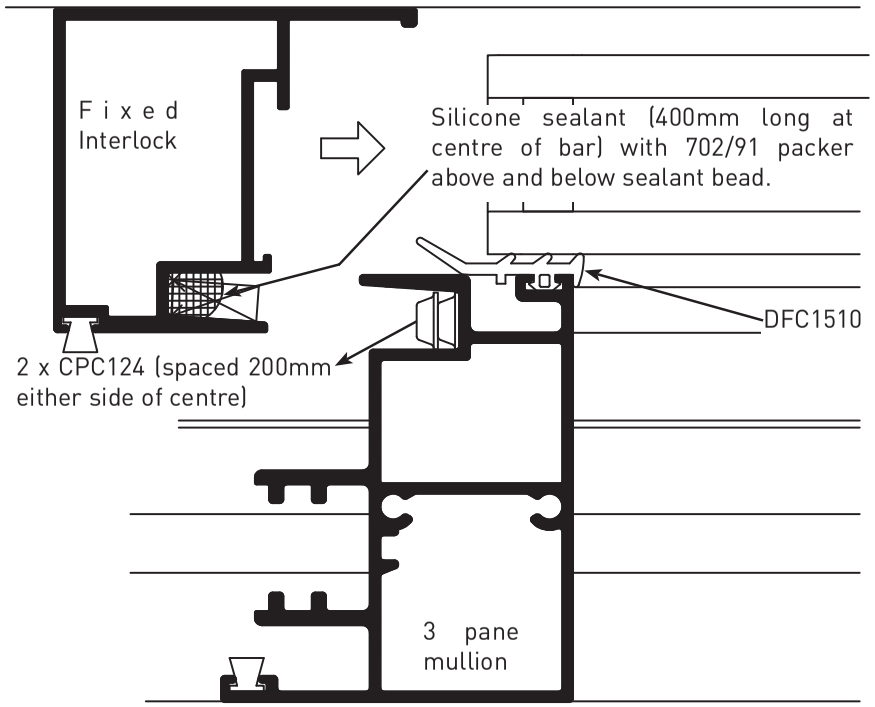

Fitting Head, Jamb & Threshold Closers

Clip in head, jamb and threshold closers in the sequence shown below. Seal butt joints in all internal closers using Henkel Terostat.

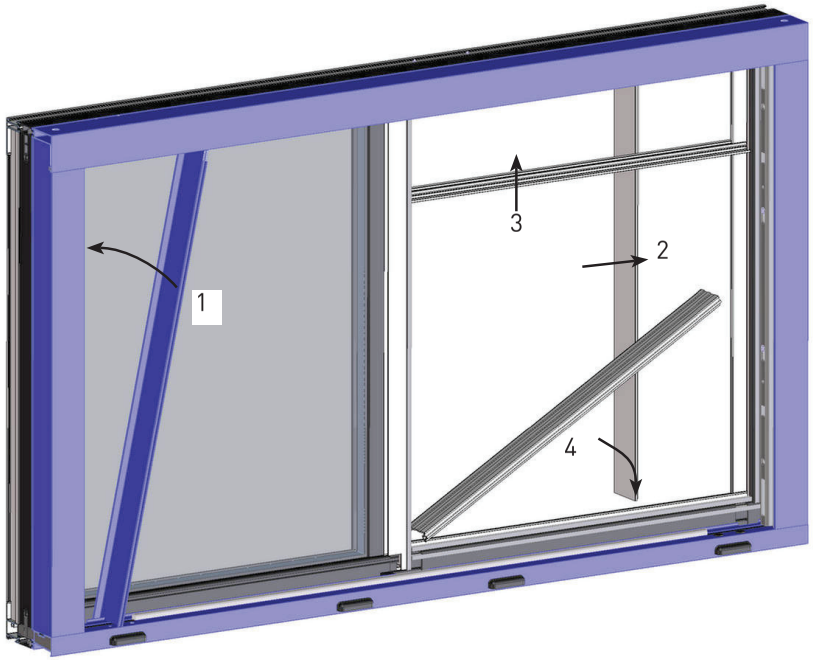

© Copyright Hydro Building Systems UK Limited. This data sheet is issued subject to the condition that it shall not be reproduced without the consent of Hydro Building Systems Limited in writing

INSTALLATION

Fitting Sliding Pane

Lift sliding pane into outer head channel then swing bottom of pane inwards and gently lower the rollers onto the track. Slide pane to a near closed position and check that the lock stile is parallel to the jamb. If necessary adjust rollers using a pozi drive screw driver through the hole at the bottom of the stile / interlock (remove interlock capping to gain access to the interlock end roller adjustment). Reduce the load on the roller adjustment screw by lifting the pane slightly whilst adjusting. The ideal nominal gap between the bottom rail liner and the top of cill is 6mm. This will result in 12mm panel edge cover at the head.

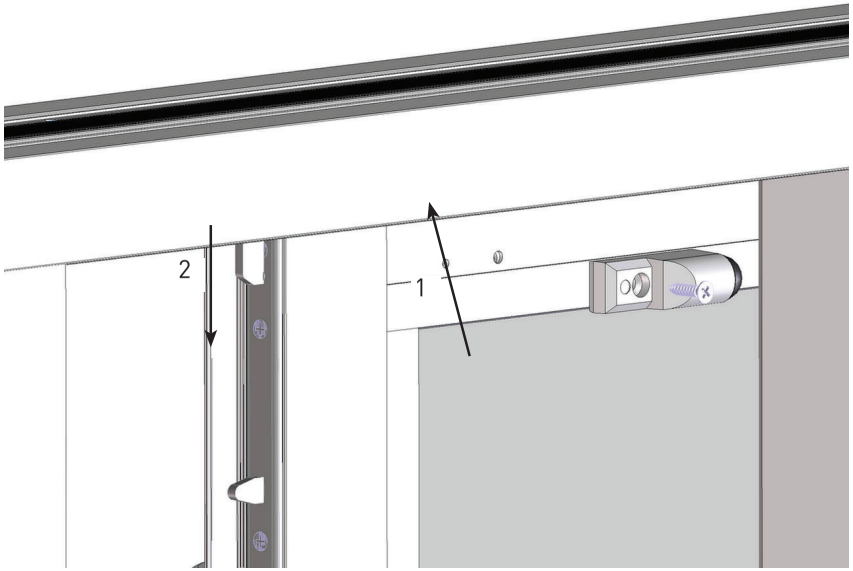

Adjusting Keep

Slacken two keep fixing screws previously fitted. Line up recess in keep with anti-lift pin on lock. Re-tighten screws and check lock operation. Adjust if necessary. Once Keep is correctly adjusted, fit No. 8 x 1 1/2" csk pozi self tappers to all remaining keep fixing holes. Cut and fit trim CP069 above and below keep.

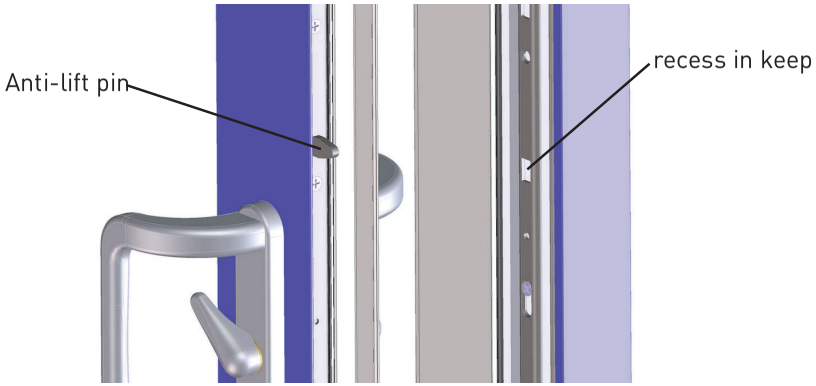

Fitting Anti Lift Blocks (Not required when concealed trickle vent is fitted)

Temporarily remove handles and cylinder. Without bump stops fitted, carefully open door as far as it will go. Using CWC115 anti-lift block as a template, with it held tight against the polyamide upstand, drill two 4.2 dia holes. Fit 2 or 3 anti-lift blocks and / or horseshoe packing shims depending on clearance using No. 10 x 1 1/4" csk pozi self tapper. Repeat as close to lock jamb as possible.

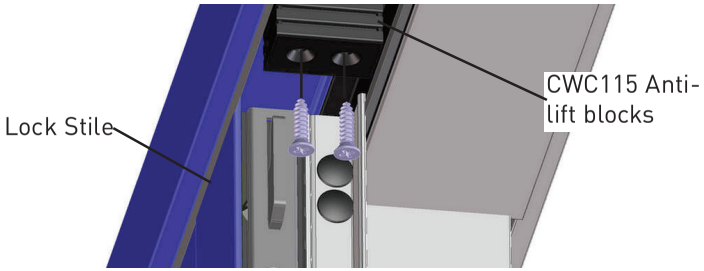

© Copyright Hydro Building Systems UK Limited. This data sheet is issued subject to the condition that it shall not be reproduced without the consent of Hydro Building Systems Limited in writing

INSTALLATION

Fitting Bump Stops

Fix CPP151 Bump Stops to head and cill using No. 8 x 1/2" pan pozi self tapper as shown below. On non-handed 2 & 3 pane cut down kits, where there are un-used bump stop fixing holes, fill them using CPC122 5mm hole plugs. Where necessary, a second bump stop buffer can be fitted to the opposite end of the stop to pack it off the jamb. On 3 pane XOX and uneven pane doors, use CPC121 bump stops fitted to the inside of the top and bottom rails as shown below.

Re-fit handles and test operation of the door. Make any necessary adjustments and re-check operation.

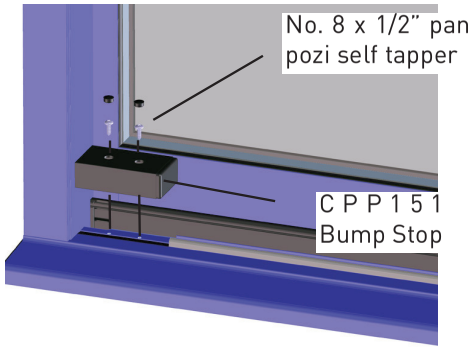

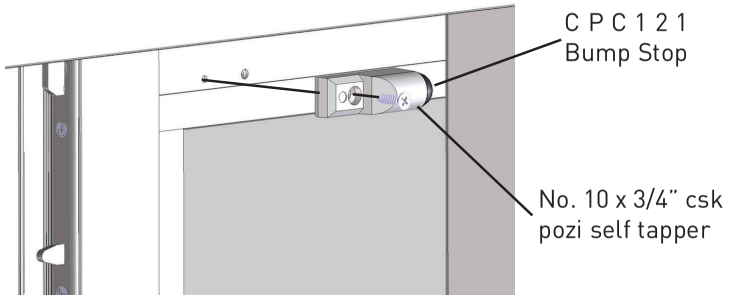

Fitting Anti Jemi Plates

Fit Anti-Jemi plates (CPC129) to bottom of interlock and lock stile using 2 off No. 10 x 1 1/4" csk self tappers as shown below. Check operation of sliding door. Fit interlock capping as usual.

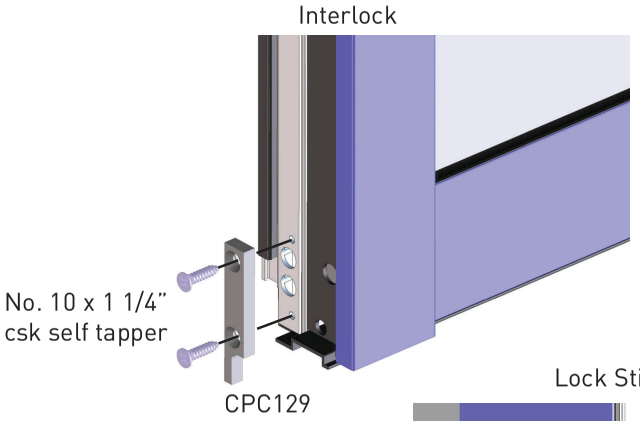

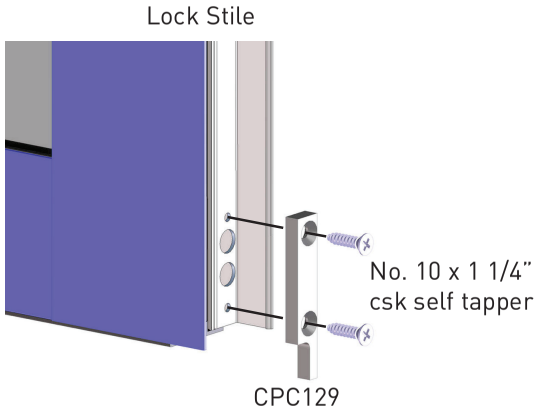

© Copyright Hydro Building Systems UK Limited. This data sheet is issued subject to the condition that it shall not be reproduced without the consent of Hydro Building Systems Limited in writing

INSTALLATION

Fitting Concealed Trickle Vent

Slide C182 mesh into groove in CPC154 trickle vent. With sliding pane(s) already fitted, close door into locked positon. Slide CPC154 PVC extrusion up over the top of the slding pane as shown alongside with the slots facing towards the inside. Take care not to distort the mesh. (on sites where access is restricted - near a return wall or similar - the CPC154 can be cut in two before inserting). Push the CPC154 tight against the polyamide downstand in the head. Drill 3.5 dia holes through existing holes in trickle vent into head. Fix using No. 8 x 1/2" pan pozi self tappers. Fix CWC109 operator to inside of head using screws supplied.

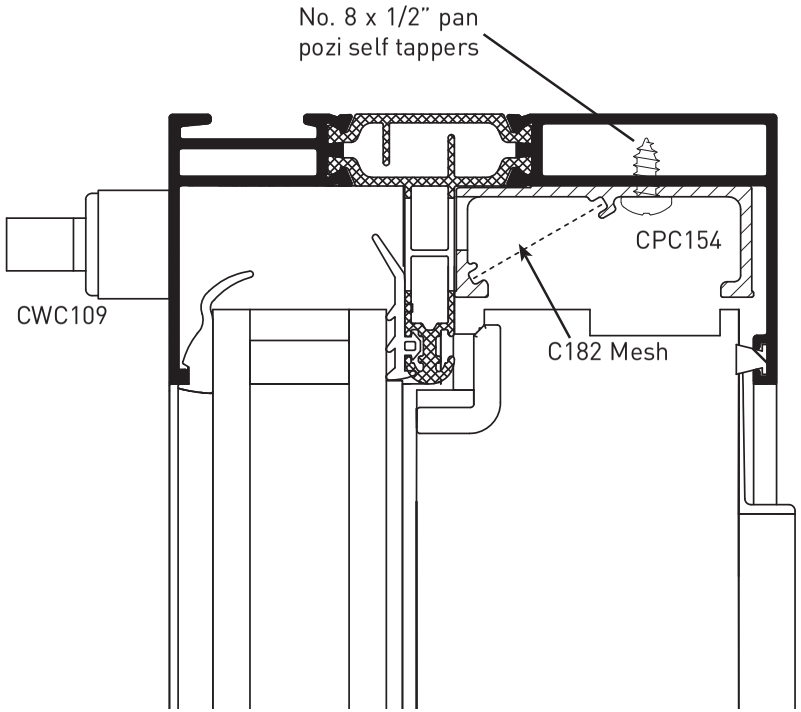

© Copyright Hydro Building Systems UK Limited. This data sheet is issued subject to the condition that it shall not be reproduced without the consent of Hydro Building Systems Limited in writing

FINISHING OFF

Sealing
The recommended sealant for the perimeter exterior is Low Modulous Neutral Cure Silicone Sealant. Backing foam should be used where the perimeter gap is over 5mm. Where the gap is within the 5mm range, a neat application of silicone is all that is required on the outside.

A final check of the internal and external perimeter seals should be undertaken. Any weak spots that are identified should be rectified and tooled to a high visual finish. Any excess sealant must be cleaned off of the finished surfaces using appropriate cleaner.

Cleaning After Installation
If excess sealant is to be cleaned off. Ensure that any solvent used will not damage any of the metal finishes, synthetic rubbers or plastics which may be present.

Warning
Take particular care if there is any cement or plaster on the aluminium. It is harmful to the metal finish and should be washed off while still wet. DO NOT RUB or particles of grit will permanently damage the metal or paint finish.

Routine Cleaning
No aluminium finish is "Maintenance Free" and hence should be cleaned at regular intervals. See surface treatment suppliers literature/website for cleaning and maintenance requirements.

Maintenance
Locks and rollers are sealed for life and require no special regular maintenance other than wiping the faceplate of the lock and the stainless steel track down with a damp cloth periodically. In addition, regular checks must be made to ensure that the track is not damaged or obstructed in any way. If you are unsure DO NOT operate the door and seek professional help.

Operating And Safety Instructions
In order to preserve functionality of the door, and to guarantee safety, it is imperative the directives listed below are observed.

- The door sash must not be burdened with additional weight.
- Do not place any objects between the sliding pane and frame.
- Do not allow children to operate the door.
- Do not leave pane open during strong winds.
- Caution! A slamming pane can lead to injuries while closing.
  Do not grasp the door between the sliding pane and frame.

© Copyright Hydro Building Systems UK Limited. This data sheet is issued subject to the condition that it shall not be reproduced without the consent of Hydro Building Systems Limited in writing